Mac Victor®
Expand Your Power®

Wall Mounted Shelf for UPS / Battery Packs
(Part #003-00021)

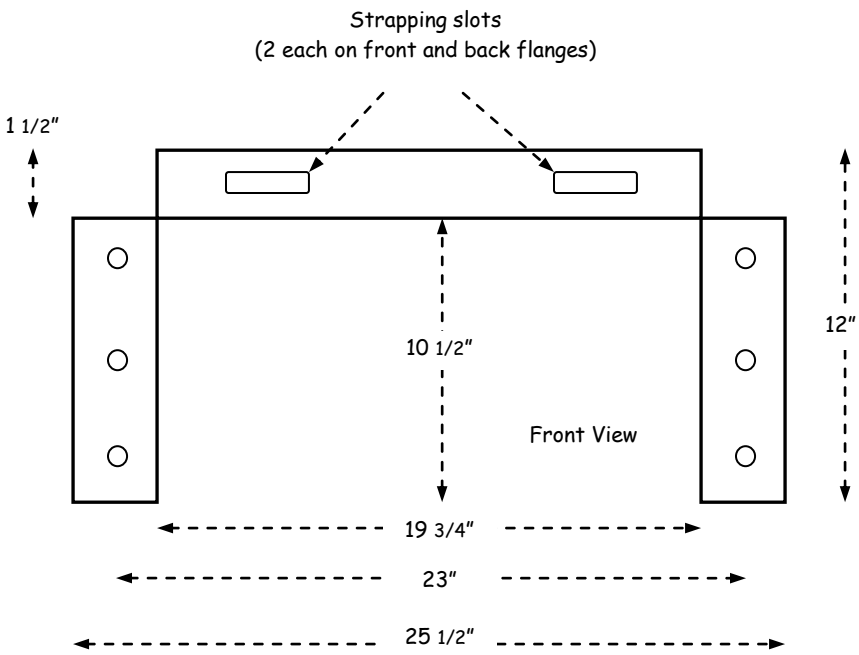

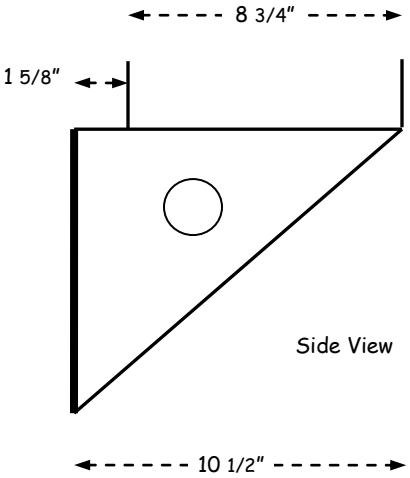

10500 Wakeman Drive - Suite 105 • Fredericksburg, VA 22407 • Phone: 540-220-8116 • Fax: 540-242-7004
Email: Bart@MacVictor.com • Website: www.MacVictor.com